BOBRICK

Technical Data

TrimLineSeries™ SURFACE-MOUNTED PAPER TOWEL DISPENSER

B-359039

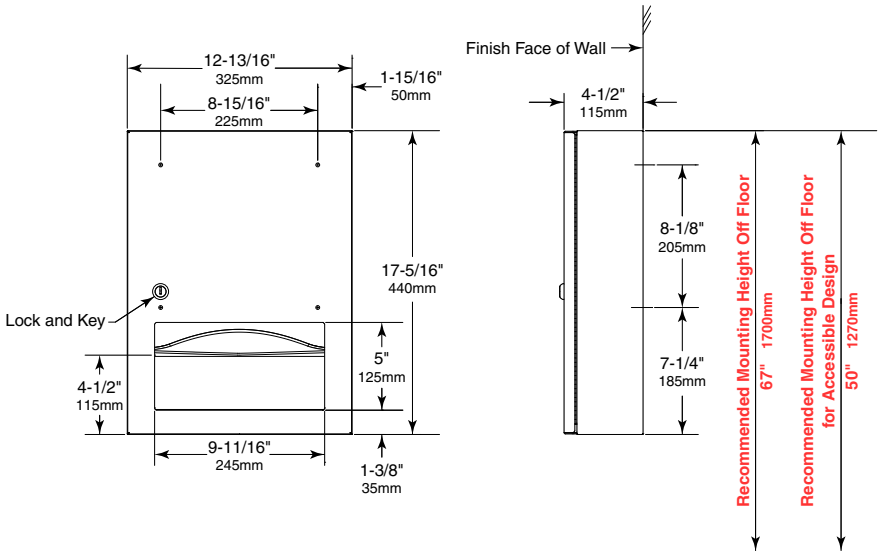

MATERIALS:

Cabinet — 18-8, Type-304, heavy-gauge stainless steel. All-welded construction. Exposed surfaces have satin-finish.

Skirt — 18-8, Type-304, stainless steel with satin-finish.

Door — 18-8, Type-304, 18-gauge (1.2mm) stainless steel with satin-finish. Secured to cabinet with a concealed, full-length stainless steel piano-hinge. Equipped with a tumbler lock keyed like other Bobrick washroom accessories.

Paper Towel Dispenser — 18-8, Type-304, 22-gauge (0.8mm) stainless steel. Capacity: 300 C-fold or 400 multifold paper towels.

OPTIONAL: Order Bobrick Part No. 369-130 TowelMate® available as an optional accessory. TowelMate accessory allows for paper towels to dispense one at a time without bulging or sagging, or falling through the towel tray opening. The 90 degree return on the towel guide prevents paper towels from falling forward and out when the door is opened for servicing.

OPERATION:

Paper towel dispenser accommodates C-fold and multifold paper towels without adjustment or use of adapters. Door-swing limiter prevents damage to washroom accessories and walls.

INSTALLATION:

Mount unit on wall with four #10 x 1-1/4" (4.8 x 32mm) sheet-metal screws (not furnished) at points indicated by an S. For plaster or dry wall construction, provide concealed backing to comply with local building codes, then secure unit with sheet-metal screws. For other wall surfaces, provide fiber plugs or expansion shields for use with sheet-metal screws, or provide 3/16" (5mm) toggle bolts or expansion bolts. If unit projects above top of wainscot, provide aluminum channel or other filler to eliminate gap between cabinet and finish face of wall.

Replacement Parts:

Knob Latch	314370-22
Skirt Kit	359039-53
Door Replacement Kit	359039-73
Lock and Key	39003-21

SPECIFICATION:

Surface-mounted paper towel dispenser shall be Type-304 stainless steel with all-welded construction; exposed surfaces shall have satin finish. Door shall be Type-304, 18 gauge (1.2mm) secured to cabinet with a concealed, full-length stainless steel piano-hinge; and equipped with a stainless steel cable door-swing limiter and a tumbler lock keyed like other Bobrick washroom accessories. Paper towel dispenser shall be 18-8, Type-304, 22-gauge (0.8mm) stainless steel. Capacity: 300 C-fold or 400 multifold paper towels.

Surface-Mounted Paper Towel Dispenser shall be Model B-359039 of Bobrick Washroom Equipment, Inc., Clifton Park, New York; Jackson, Tennessee; Los Angeles, California; Bobrick Washroom Equipment Company, Scarborough, Ontario; Bobrick Washroom Equipment Pty. Ltd., Australia; and Bobrick Washroom Equipment Limited, United Kingdom.

The illustrations and descriptions herein are applicable to production as of the date of this Technical Data Sheet.
The manufacturer reserves the right to, and does from time to time, make changes and improvements in designs and dimensions.

Issued 4/7/17 Printed in U.S.A.
© 2017 by Bobrick Washroom Equipment, Inc.